Number 67 December 2004

Ashpan

Ickenham and District
Society of Model Engineers

Number 67 December 2004

Ashpan

Contents:

Ickenham & District Society of Model Engineers was founded on 8th October 1948.
Ickenham and District Society of Model Engineers, a company limited by guarantee, was incorporated on 10th September 1999. Registered in England No: 3839364.

WWW.IDSME.CO.UK

Hon. Secretary and Registered Office: David Sexton,
25 Copthall Road East, Ickenham, Uxbridge, Middlesex,
UB10 8SD.

Ashpan is produced for members of Ickenham and District Society of Model Engineers by Patrick Rollin, 149 Bury Street, Ruislip, Middlesex, HA4 7TQ.
Email: **Ashpan.Editor@btopenworld.com**

Cover Story

Model Railway Exhibition

Back in October the Model Railway Group organised another of their Model Railway Exhibitions in the Scout Halls that back onto the club site.

The cover picture shows Graeme Vickery operating his EM gauge layout Trewithick at the show on 30th October. In the background on the right you can just see Tim Lovell who was assisting with the operation of another layout.

Work setting up the exhibition had started the previous afternoon when the Model Railway Group met at the club to gather together all the display equipment that needed to be taken round to the exhibition venue together with the club layout.

At the same time three of the group under the supervision of Tim Lovell began preparing the exhibitor's lunches.

Arrangements had been made for the Scout Halls to be available on the Friday evening and so from about six o' clock all the carefully assembled equipment was dragged through the streets of Ickenham on club trolleys and setting up began straight away.

On the following morning preparations continued from about eight o'clock but at the same time preparations of an entirely different sort were taking place in the centre of Ickenham. These were for road works which, through the use of temporary traffic lights at the junction of Swakeleys Road and Long Lane/Ickenham Road, would result in single file traffic through the junction and ultimately in tailbacks to the A40 via both Swakeleys Road and Long Lane and to Ruislip Manor by Ickenham Road. With it rumoured to be taking as much as an hour to drive from Ruislip to Ickenham it was hardly surprising that this had a detrimental effect on attendance of the exhibition during the day. Despite this when the exhibition opened at 10:30 there was a steady if not spectacular stream of visitors and at the end of the day despite some confusion at the cash desk (see page 6), it seemed that we had made a small profit for the society.

The exhibition itself consisted of seven layouts and two trade stands. While this was fewer than in previous years the average size of the layouts was quite a bit greater, with the largest, Iain Hunter's 'Maiden Lane' being some thirty-five feet long.

Once again the Model Railway Group received considerable assistance from other members on the day acting as stewards, manning the cash desk and refreshment stand, and generally assisting with set-up and break down of the exhibition. The Model Railway Group would like to extend their thanks to all those who helped.

Over the next few pages are some more pictures of the exhibition…

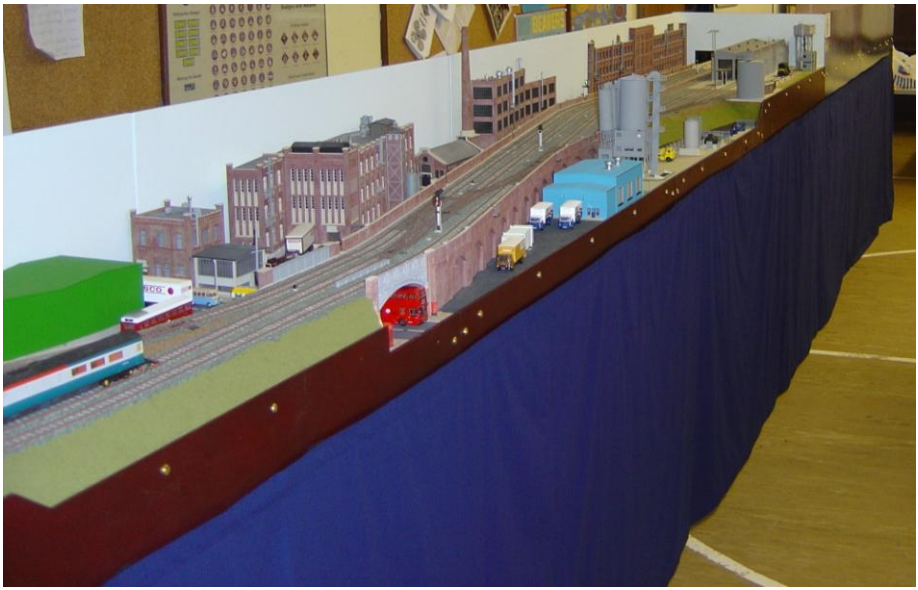

Three Views of
Iain Hunter's Layout
'Maiden Lane'

Left: Higham Bridge is a layout belonging to the Chesham Model Railway Club and represents a fictitious goods yard alongside a secondary main line in the 1960s

Below: Another view of Graeme Vickery's layout Trewithick

Left: A scenic detail on Simon Hamlin's layout 'Ballysylly'. A detailed article describing this layout appeared in Ashpan's 65 & 66. Simon, having agreed to exhibit his layout, found he couldn't attend so father Mark was roped into operate the layout on the day.

Above and Left: Two views of the club layout Swakeleys

Just Testing

While things were running smoothly in the exhibition itself, one or two problems were encountered by those manning the cash desk at the entrance. **Old Bill** *kept an eye on proceedings and here presents his report to the auditors.*

Despite the title this is not a further chapter on 'The Boat', but of a day in the life of IDSME which means that what should be easy becomes difficult and difficult becomes confusingly impossible.

It all started so well. Mathew Byatt announced that he had drawn up a fool-proof chart and that nothing could go wrong; he had covered every possible permutation to cover the selling of exhibition guides and tickets. He was in the process of mastering graphs and charts on his computer so a stunning presentation of the results would follow.

Confidence began to ebb when he noticed that Ian Mortimer was sitting alongside him. Then he noticed that despite the price of a child ticket being £1.25 there were no 5 pence coins in the float. This caused considerable panic.

It was Ian who then noticed that the cleverly designed pricing notices didn't quite work. The public facing side, printed in A4 landscape, showed the prices. The rear of the double sided notice gave the same information to the ticket sellers and indicated what the different coloured tickets meant. Unfortunately there was only one colour. GREEN! (*this will have unfortunate connotations for more senior members!).* To confuse matters further the rear had been printed in A4 portrait. This meant that although it looked like the ticket sellers were asleep with their heads on one side on the table, they were actually trying to read the pricing information.*

** Editor's Note: The Instructions to ticket sellers on the rear of the public price list was actually printed on a separate piece of paper. It had merely been placed in the same holder as the*

Mathew's accounting columns had also taken on some weird labels. For instance, one read 'Family Tickets' whilst another read 'No. of family tickets'. It was not clear what the subtle difference was but there must have been one as the figures in the columns differed! (This was from the time we had reached only nine ticket sales so the omens were not good.)

Things start to go wrong with the accounts as Ian Mortimer sells the very first tickets of the day.

Other columns read 'Guides', 'Loaned Guides', Missing Guides' and 'Wasps'. The Wasp column was the result of the entrance gazebo being under constant Wasp attack. This recorded the number of wasps killed, by whom and how i.e. left or right foot, or in my case left or right stick. Peter Pardington, who was greeting arrivals at the entrance, spent most of his time engaged in a frenetic Morris Dance (no, not our Morris) in his attempts to stamp on our yellow-striped friends.

---

public price list for convenience so that it would not get lost prior to the exhibition opening. That the ticket sellers failed to remove it from the holder before trying to read it, simply because an instruction to do so was not included, just about sums up the whole sorry business.

Other columns were added to the sheet. One was headed 'pretty young women'. This column started by accident when two attractive young ladies on their way back from the 'Coach & Horses' hovered at the entrance. Ian immediately offered them £1.25 to come in! The surprise was that they took him up on his offer.

During a ten minute period Ian sold family tickets to several three-member families as this was 'a bargain'. Thus they paid £1 more than they needed to. Then he charged one family £1and the next £9. The Mother in the second family was briefly struck dumb by the obvious unfairness of this and demanded a refund. What she got is anyone's guess.

When this and other mistakes occurred, in true Captain Mainwaring style, Ian responded with 'Just testing'. At about the same time Corporal Jones stand-in, Derek Elliott, assisted by banging into the table spilling tea/coffee over the columns of information. This pushed Mathew over the edge and he began suffering from severe memory lapses: 'How many people were in that family? did they have a Guide?.....oh, have I made a note of them already?' etc.

I had to leave during the afternoon and was sorry to do so as the rest of my day could only be an anti-climax after all this. Remember, it is not just Heineken that reaches the parts that other beers cannot reach; a dose of IDSME is just as good.

Old Bill

While it is appreciated that the old hands will be well acquainted with the following tip, we do have a number of less experienced members who may gain some benefit from reading how to overcome everyday problems in the workshop, so here goes:-

When drilling brass and plastics normal twist drills have a tendency to bite into the material which can result in the work piece being grabbed and spun, if not adequately secured, or erratic feed of the drill as backlash in the quill is taken up. The way to avoid this is to use a straight fluted drill but these are apparently rare beasts and no doubt very expensive to buy. I probably have between 300 - 400 drills of various types but only three with straight flutes. However it is very easy to make a twist drill behave itself. All that is required is to straighten the flute at the cutting edge by as little as 1/64" (that's about 0.5 mm for the metrically minded).
This can be achieved either by hand stoning or carefully grinding the sharp cutting edge to lie parallel with the drill axis(generally referred to as backing - off). Drilling brass will then become a pleasure rather than a hazardous operation. For a personal demo just ask.

Why not share your expertise with the rest of us and let the editor have your workshop tip for inclusion in a future Ashpan.

Vic Barton

Ashpan Notebook

Exhibitions

Once again IDSME has display stands at both The Model Engineer Exhibition and The London Model Engineering Exhibition. The Model Engineer Exhibition is on for three days from Wednesday 29th to Friday 31st December 2004 and is being held at Sandown Park, the same venue as in recent years. The London Model Engineering Exhibition, by contrast, has moved to a new venue (for the show although IDSME has been there before) and is being held at Alexandra Palace from Friday 21st to Sunday 23rd January 2005. IDSME's attendance at these shows is, this year, being organised by Peter Pardington.

Model Railway Group

The Model Railway Group meets regularly each week in the clubhouse. Until now the meetings have been on Mondays but due to other commitments of certain members of the Group they have now decided, with immediate effect, to meet on Tuesday Evenings instead. Therefore anyone interested in joining the Model Railway Group should now come down to the club on Tuesdays from about 8pm.

Ashpan 68

This issue of Ashpan contains articles and pictures from seven different members, two of whom are making their first ever contribution to Ashpan. If you would like to join the illustrious and growing list of contributors to Ashpan for the next issue would you please let the editor have you're contribution by the April Running Day as the current projected publication date for Ashpan 68 is the beginning of May.

Chairman's Chat

There is no Chairman's Chat in this issue. When asked for an explanation, the Chairman said '*Temper's Fudge It*'. Since we are unable to locate an Italian Fudge manufacturer by the name of 'Temper' we assume he meant to say *Tempus Fugit*, which is of course Latin for *'I ran out time Guv, honest!'* Hopefully normal service will be resumed in the next issue even if he has to get a former chairman, recently returned to the committee, to ghost write it for him (HINT).

Seasonal Levity

The last few pages of this issue of Ashpan, as in past December issues, contain a small number of puzzles and amusing articles to keep you entertained during the Christmas Break. Meanwhile IDSME itself got into the Christmas Spirit slightly earlier than normal this year when we held our annual Christmas Dinner at the beginning of December to avoid clashing with the Ickenham Traders Evening Portable Track Run. This year's event was held at The Gate Public House in Northwood. Organised by Ian and Jean Mortimer, it was once again a success, with the annual 'construct a model of dinner competition' as popular as ever, to the extent this year that another party of non-IDSME members joined in. They didn't win though. We made sure of that!

Secretary's Notes

At the AGM we elected a Committee for 2004/05 of John Browning - Chairman, Peter Cathcart - Vice Chairman, David Sexton - Secretary, Mark Hamlin - Treasurer, Ian Mortimer – PRO and Mel Fuller – Committee Member. Peter Pardington continues in office as President.

Since then the committee has set up two working groups to look at specific issues and report back. Our Articles of Association are being reviewed to see what improvements we can make in the light of five years experience. Peter Cathcart leads on this with Mel Fuller, Malcolm Parsons and myself also on the group. The other working group is developing a long term site plan to guide future improvements to buildings and facilities on our site. It is led by Ian Mortimer and has members representing the various interest groups across our membership.

Sadly I have to report that Vic Collins, a member of some years, died in early October. Regular Friday night attendees may remember a very interesting talk given by him a few years ago on tethered model boat racing, his particular interest.

Bob Proudfoot has taken over the mantle of organiser of portable track runs from Ian Mortimer, so please speak with Bob if you want to be added to the list of regular helpers or have a run request. Be warned - we do have far more request for runs than we can accommodate and will normally meet our regular engagements first.

For those of you seeking ideas for late Christmas presents, 'Cathcart Independent Trading' now has a very extensive line

of clothing, badged with the IDSME insignia, available for order. Please see Peter Cathcart for more details.

A niggle from me over the mis-use of parking boards. Twice already this year the pub handyman has returned two or three parking permit boards left in the hedge after running days. A third incident happened on the December running day when a member found a spare board propped alongside his car. I really don't want to introduce a signing out book for these boards but I think we'll have to consider this if the abuse of the present arrangements continues. Please return the boards to the locker room before you leave the car park - do not assume someone else will do so for you.

And on a kinder note, I wish you all a very peaceful Christmas, a happy New Year, and hope to see many of you at the two forthcoming model engineering exhibitions.

David Sexton

Seasons Greetings to all Ashpan Readers

KEW HERE!

By David Collins

For many regular IDSMEites one of the year's highlights (apart from Sir Cyril's annual visit at Christmas) must be the portable track run at Kew Bridge Steam Museum on the weekend of The Live Steam Model Railway Show, and this year was no exception. Those of you who come along will know that we have a prominent position alongside the entrance, which means we catch the visitors just as they are arriving or leaving. Alongside us on the right hand side is the 2 foot gauge line, which this year had the Hampshire Narrow Gauge Railway Society's Quarry Hunslet *Cloister* puffing up and down with a coach. Sadly the HNGRS' other steam loco *Wendy* is under repair, so the coach was hauled one way by an internal combustion engine (petrol, I think) locomotive.

The only disadvantage of our location is that whilst the other exhibitors are in the dry (and warm! – Ed), we are exposed to the elements. This is all very well, but, contrary to the weather forecast, this year was a bit on the damp side, particularly on the Saturday. However I don't think our sprits were put down and we carried on against all the odds, which was helped by excellent bacon & egg sandwiches, vegetable soup and tea, supplied by Matthew Byatt.

The track plan consisted of a straight section running alongside the museum building up to just before the 2ft gauge track curves left (if only if we could have a crossing on the level, wishful thinking eh?) with a two road station with buffer stops at the end and a gazebo acting as a overall roof, and a set of hand operated points. With two train operation, as soon as one train arrived in the station, the other was full and ready to go. For the most part, the two trains (consisting of two trolleys each) were "topped & tailed" by a battery loco and a steam locomotive. This year we had some excellent performers, including Mark Hamlin's *Elise*, which managed to run continuously for six hours and, although as

most of you will know I am a steam man, I must say the two 37s did pretty well on both days. We had a lot of satisfied customers and I did my bit on the Sunday handing out the last of our 2004 running day leaflets with Frank.

As for the exhibition itself, there were some interesting layouts, including one based on the Darjeeling Himalayan line in Gauge 1, and some OO gauge live steam, which was quite amazing. There were some good trade stands; I purchased a video on steam charters that have ran out of Marylebone in the 1980s and a few books. I was also interested in the garden railway locomotives, rolling stock and accessories, maybe that might be an area that I would be interested in the future (but not for a long time).

To sum up, it was a "jolly good show" and I most certainly enjoyed myself on both days. I am most certainly looking forward to next year's event.

It wasn't just visitors to the show who were interested in the trains

Pinner Panto

Another regular portable track run in recent years has been the Pinner Panto evening in late November organised by local traders.

The evening this year was on the Thursday following the Kew Bridge run and being an evening run in November is unusual in being carried out entirely in the dark except for the earliest stages of setting up.

The evening was very busy with approximately 680 passengers being carried in only a few hours.

Also worth mentioning is the Ickenham Trader's Evening which IDSME attended with the portable track.

Unfortunately this fell on the day that this issue of Ashpan closed for press and it has not been possible to include a report here.

San Francisco Cable Cars

by Patrick Rollin

As some of you will know, during the summer I spent several weeks in the United States and Canada on holiday. Several days were spent in San Francisco and one of the highlights was riding on the Cable Cars. I thought a few notes on this fascinating system might be of interest to Ashpan readers. We start with a note on the geography. San Francisco is not flat. Despite the presence of a number of hills, the city streets are laid out on the grid system used in many American cities even where this means the road goes straight up the side of a mountain. Just how steep these roads are can be judged from the picture above by comparing the road with the buildings. I can attest to how steep these hills are, having made the

mistake of climbing several of them during the course of my stay. In fact the steepest gradient on the Cable Car system is 1 in 5. The picture actually shows Cable Car no 55 descending Nob Hill towards the Market Street Terminus of the California Line. The terminus is located in the far distance just short of the building at the end of the road.

It was the very steep nature of the streets in San Francisco that lead to the wide spread adoption of Cable cars. In 1852 a horse drawn omnibus service was introduced for the first time. Teams of horses were required to haul these up the steep hills and they could only be expected to work for about an hour at a time. Accidents were common place. One such incident in 1869, where one of the horses lost its footing on damp cobblestones, causing the other horses to fall and be dragged down the street, was witnessed by Andrew Hallidie.

Hallidie was the owner of the California Wire Works whose principle product was wire rope. He also had previous mining experience where he had made use of his wire rope to haul wagons out of the mine. Following the 1869 accident Hallidie set about devising a system of cable haulage that would be suitable for public street cars.

The first line to Hallidie's design opened on 2nd August 1873 and proved to be a complete success. The system expanded rapidly and by 1891 there were eight cable car companies operating 600 cable cars over 55 route miles of track.

The earthquake of 1906 brought devastation to the Cable Car system as well as the rest of San Francisco. While some of the routes were rebuilt as Cable Cars (usually the routes going over the steepest hills) many others were converted to electric traction.

Today there are only three Cable Car routes left. The California Line runs along California Street from Market Street to Van Ness Avenue. The Powell-Mason line runs from Market St along Powell Street and then along Mason St to Bay St in the Fisherman's Wharf area of the city. The Powell-Hyde Line shares the same route as the Powell Mason Line as

far as the Cable Car Barns and Power House. From that point on it follows Hyde St over Russian Hill to its terminus at Beach St.

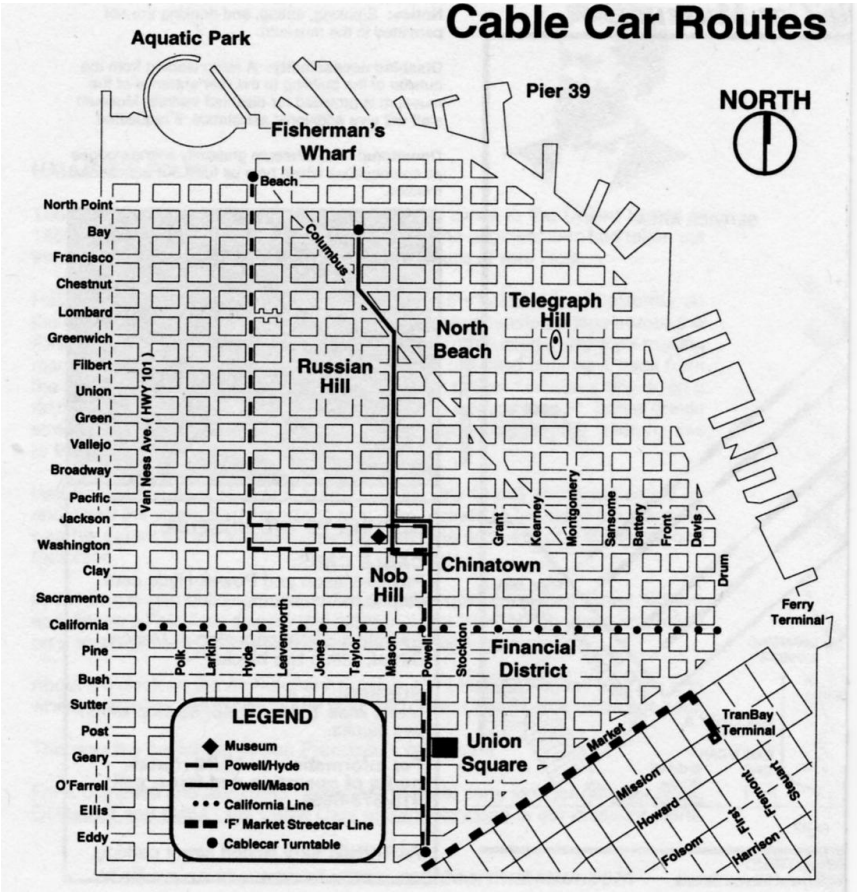

How The System works

Unlike many cable hauled systems in the world the Cable Cars in San Francisco are not permanently attached to the cable. Instead the cable, which is carried below street level, is permanently running at a speed of 9.5 mph and the Gripman on the cable car controls the speed of the car by using the grip mechanism to grip the cable and pull the car along. The advantage of having the cars independent of the cable is that

if it is necessary for one car to stop for some reason, all other cars on that cable can carry on moving.

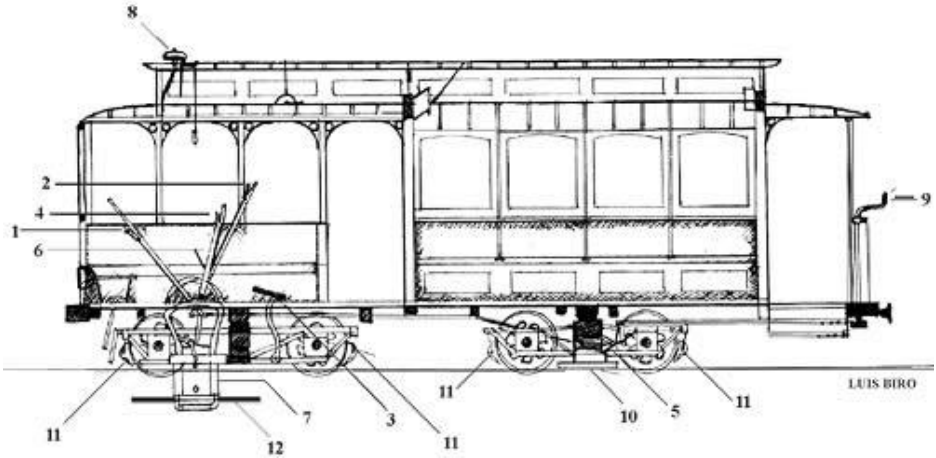

1. Emergency Brake Lever
2. Track Brake Lever
3. Wheel Brake lever
4. Grip Lever
5. Emergency Brake
6. Adjusting Lever
7. Grip
8. Bell
9. Rear Wheel Brake Lever
10. Track Brake
11. Wheel Brake
12. Cable

The grip mechanism passes through a slot in the road surface in the centre of the track and grips the cable from above.
The grip mechanism has three positions; Full grip, where the cable is tightly gripped and the car is hauled along; Partial Release, where the cable is gripped loosely and can slide through the jaws of the grip and Full Release where the jaws are opened allowing the cable to drop down below the level of the grip.
The cable cars have three types of brake fitted. The wheel brakes on the leading bogie are controlled by the Gripman by means of a foot pedal while those on the rear bogie are controlled by the conductor. The second form of brake is the track brake which consists of wooden blocks which are forced against the upper surface of the running rail and these are under the control of the Gripman by means of a lever. Finally there is the emergency brake which consists of a wedge

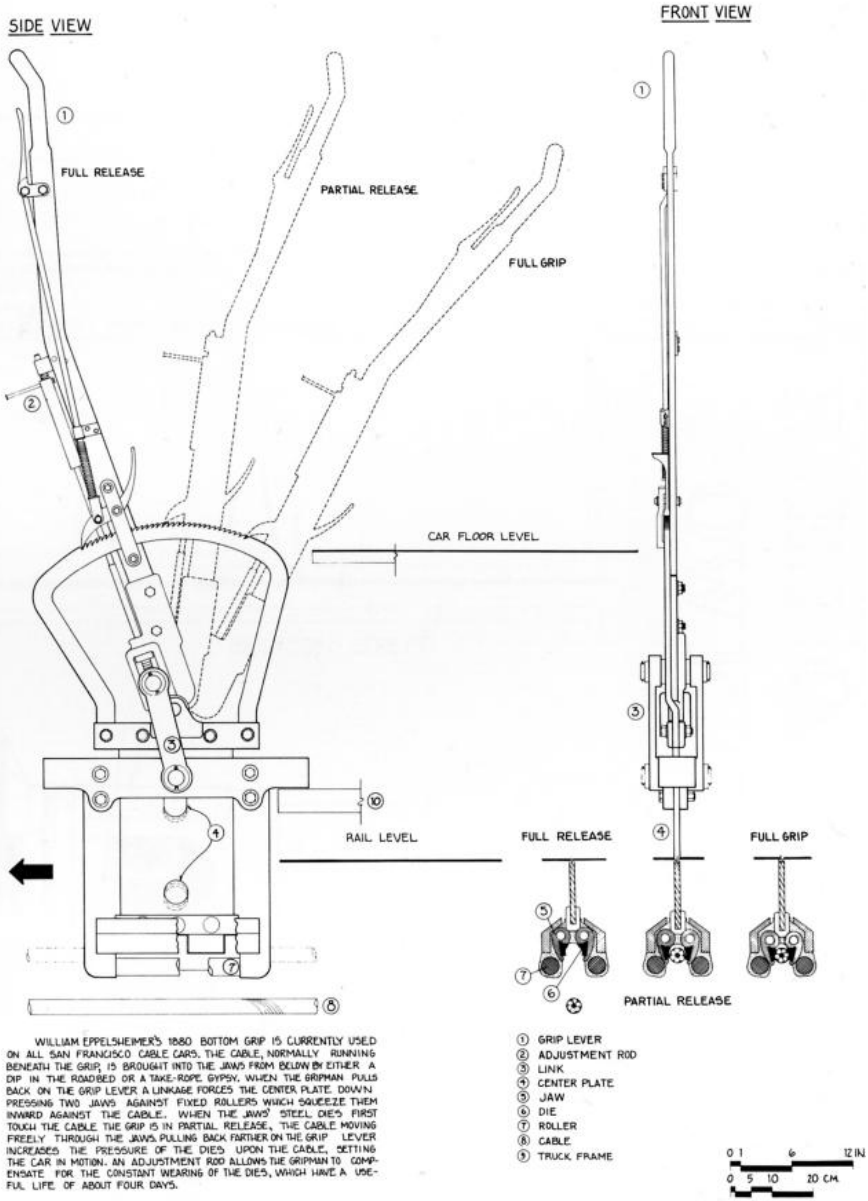

WILLIAM EPPELSHEIMER'S 1880 BOTTOM GRIP IS CURRENTLY USED ON ALL SAN FRANCISCO CABLE CARS. THE CABLE, NORMALLY RUNNING BENEATH THE GRIP, IS BROUGHT INTO THE JAWS FROM BELOW BY EITHER A DIP IN THE ROADBED OR A TAKE-ROPE GYPSY. WHEN THE GRIPMAN PULLS BACK ON THE GRIP LEVER A LINKAGE FORCES THE CENTER PLATE DOWN PRESSING TWO JAWS AGAINST FIXED ROLLERS WHICH SQUEEZE THEM INWARD AGAINST THE CABLE. WHEN THE JAWS' STEEL DIES FIRST TOUCH THE CABLE THE GRIP IS IN PARTIAL RELEASE, THE CABLE MOVING FREELY THROUGH THE JAWS. PULLING BACK FARTHER ON THE GRIP LEVER INCREASES THE PRESSURE OF THE DIES UPON THE CABLE, SETTING THE CAR IN MOTION. AN ADJUSTMENT ROD ALLOWS THE GRIPMAN TO COMPENSATE FOR THE CONSTANT WEARING OF THE DIES, WHICH HAVE A USEFUL LIFE OF ABOUT FOUR DAYS.

shaped piece of metal which is forced into the same slot in the track that the grip passes through. Again this is controlled by a separate lever and I understand it is very effective at stopping the cable car to the extent that on the few occasions when it has been used the wedge shaped piece of metal has become welded to the track.

Generally during the course of the journey the Gripman will control the speed of the cable car by varying the grip between the Full Grip and Partial Release positions and by use of the wheel and track brakes. Thus when the car is stationary the grip will be in the partial release position with the cable sliding through the jaws. The wear on the jaws is quite considerable and they have metal die inserts which have to be replaced every few days. Using a more wear resistant material is not considered to be an option as this would increase the wear on the cable and this is not so easily replaced. The adjustment lever marked on the diagram is to allow adjustment of the grip as these dies become increasingly worn. The Grip is only moved to the full release position at certain points where the cable follows a different route to the track.

The final piece of equipment of note on the cable car is the bell. This is rung by the Gripman to warn of the cable car's approach. Since 1955 an annual Bell ringing competition has been held among Gripmen.

The cable cars used on the Powell-Mason and Powell-Hyde Lines are single ended as shown in the diagram while those used on the California Line are double ended. Cars on the Powell-Mason and Powell-

Hyde Lines have to be turned at each end of their journey and a turntable is provided at each terminus. Cars are pushed on and of the turntables by hand.
Altogether there are forty four cars with as many twenty seven in use at anyone time.

Track & Cable

The track is 3'6" gauge and between the rails is a slot through which the grip passes to access the cable which is carried below the road surface. Generally the cable runs at a level lower than the grip so that when it is released it drops clear of the grip. The picture shows the point at which the California Line is crossed by the Powell-Mason and Powel-Hyde Lines. At this point cars on the Powell-Mason and Powell-Hyde Lines must let go of the cable as their cable passes beneath that of the California Line. The California Line was built first and is thus the one with the right to have its cables at the higher level with the advantage of not having to let go of the cable though the junction.

The cable is 1.25” in diameter and there are four cables altogether, all them continuous loops. There is one cable for the common section of the Powell-Mason and Powell-Hyde

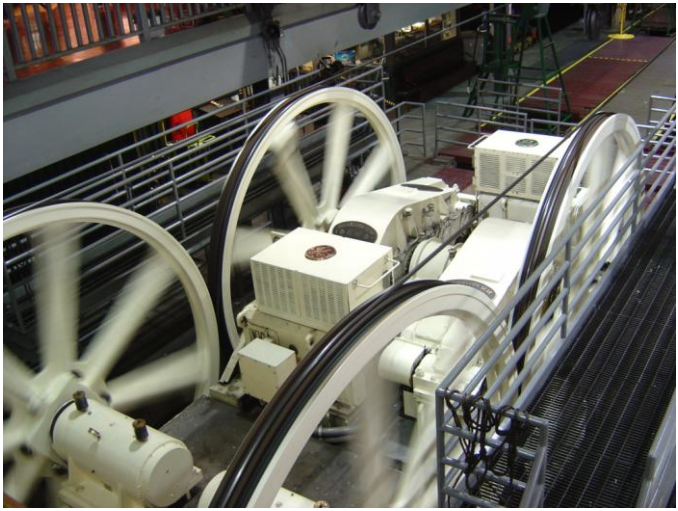

Lines and one each for the remaining sections of the two lines. The California Line has its own separate cable. The cables are powered

SAN FRANCISCO'S CABLE RAILWAY USES A FIGURE-EIGHT SYSTEM, APPARENTLY INTRODUCED BY THE SUTTER STREET RAILROAD IN 1877, TO DRIVE ITS THREE CABLES. TWO ELECTRIC MOTORS, ONLY ONE OF WHICH IS USED AT A TIME, DRIVE THE WINDING MACHINERY. THE 710 RPM MOTOR SHAFTS ARE CONNECTED TO REDUCTION GEARS SO THAT THE PINION SHAFT TURNS AT 78 RPM. THE 42-INCH DIAMETER, HERRINGBONE TOOTHED PINION GEAR DRIVES TWO INTERMESHED, 14-FOOT DIAMETER BULL GEARS. THESE TWO GEARS ARE MOUNTED ON THE WINDING SHEAVE SHAFTS, WHICH TURN AT ABOUT 19 RPM, AND EACH CARRY THREE 14-FOOT DIAMETER WINDING SHEAVES.

THE CABLES ARE DEFLECTED INTO THE POWERHOUSE THROUGH THE MAIN SHEAVE PIT UNDER THE BUILDING'S SOUTHEAST CORNER BY 8 TO 10-FOOT DIAMETER SHEAVES. EACH CABLE IS THEN WRAPPED AROUND ITS TWO WINDING SHEAVES IN A FIGURE-EIGHT PATTERN, FROM WHICH THE DRIVE SYSTEM TAKES ITS NAME, AND PASSES BACK TO THE TENSION SHEAVES. AFTER A HALF TURN AROUND THE TENSION SHEAVE THE CABLES PASS UNDER THE WINDING SHEAVES AND ARE DEFLECTED BACKUNDERTHE STREET THROUGH THE MAIN SHEAVE VAULT.

EACH TENSION SHEAVE SITS IN A BEARING FRAME MOUNTED ON A MOVABLE CARRIAGE. HEAVY CHAINS CONNECT THE FRAME WITH A COUNTERWEIGHT SUSPENDED IN A PIT BELOW THE CARRIAGE. THE WEIGHT PULLS THE BEARING FRAME AND SHEAVE BACK ON THE CARRIAGE, COMPENSATING FOR LOAD VARIATIONS ON THE CABLE AND TAKING UP ITS DAILY STRETCHING. WHEN THE SHEAVE AND FRAME REACH THE LIMIT OF THEIR TRAVEL, A BLOCK AND TACKLE IS USED TO MOVE THE CARRIAGE BACK ON ITS RAILS, RAISING THE COUNTERWEIGHT AND MOVING THE BEARING FRAME TO THE FRONT OF THE CARRIAGE, WHERE THE ENTIRE PROCESS IS REPEATED. AFTER A CARRIAGE REACHES THE LIMIT OF ITS TRAVEL, ITS CABLE IS REPLACED, AND THE CARRIAGE RESPOTTED AT THE NEAR END OF THE TENSION RUN.

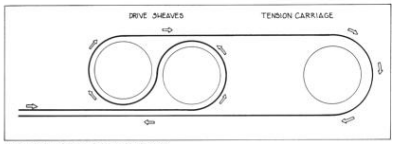

FIGURE-EIGHT DRIVE SYSTEM

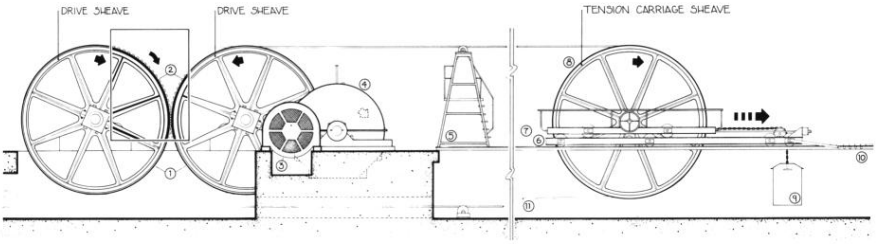

① POWELL-MASON 14-FOOT DIAMETER SHEAVES, FABRICATED BY VOEST OF AUSTRIA (1965)
② 14-FOOT DIAMETER, 152 TOOTHED, HERRINGBONE BULL GEARS VOEST (1965)
③ MOTOR NO. 2 750 HP GENERAL ELECTRIC MOTOR (1926)
④ REDUCTION GEAR NO. 2 710 TO 78 RPM FALK CORP. SINGLE REDUCTION GEAR (1926)
⑤ CABLE SUPPORT PEDESTAL
⑥ TENSION CARRIAGE
⑦ BEARING FRAME
⑧ 14-FOOT DIAMETER TENSION SHEAVE
⑨ COUNTERWEIGHT
⑩ TENSION CARRIAGE RACK
⑪ POWELL-MASON CABLE (APPROX. 19,300 FEET LONG)

WINDING MACHINERY ELEVATION
NOTE: PART OF WINDING SHEAVE REMOVED TO EXPOSE BULL GEAR

0 1 2 5FT
0 1 .5 1 2M

by four 510 hp electric motors driving large 14’ diameter drive Sheaves. There is also a tension sheave which takes up the slack caused by the stretching of the cable over time. The arrangement of the cables over these sheaves is shown in the

diagram. This equipment is located in the same building as the car barns and cable car museum on the corner of

Washington and Mason Streets. Both the Powell-Mason and Powell-Hyde lines pass the building and so there is no problem getting their respective cables from the building to the line. The California Line does not however pass the building and so the cable runs beneath Mason St to California St even though there are no tracks along this

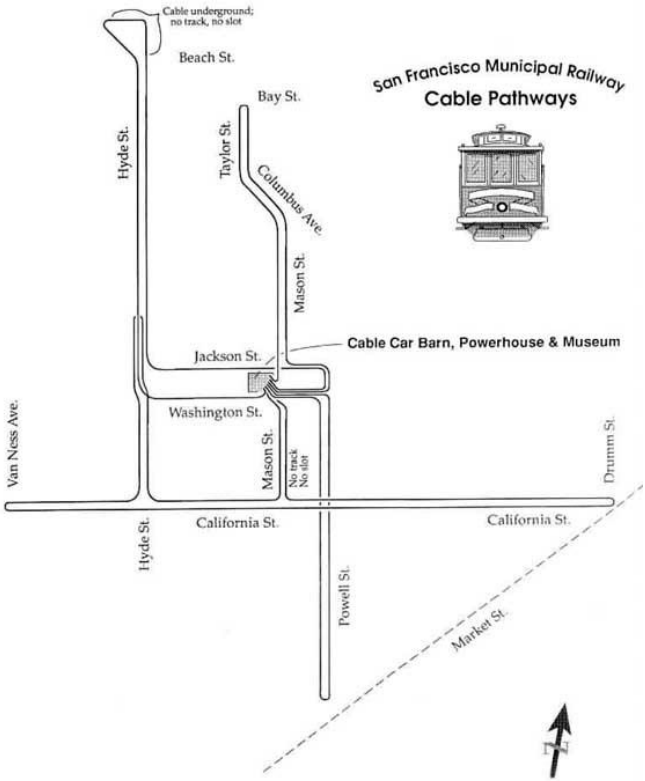

stretch. There is also a connecting line from the California Line to the Powell-Hyde Line along Hyde St used by California Cars returning to the Car Barn and the California Line Cable provides the motive power for this section as well.

The lengths of the cables vary between 9,000

feet for the Powell Line and 21,500 feet for the California Line. The average life of the cable also varies between 110 and 300 days. Replacement is a lengthy process taking several hours. First the old cable is split at the original join and the new cable spliced into one end. The other end of the old cable is attached to a haul off drum and the old cable is wound onto this drum, in the process pulling the new cable through the system. When the temporary splice returns to the car barn the old and new cables are separated and the two ends of the new cable are spliced together. Most of the time is taken creating the two splices as even the temporary splice has to be good enough to pass through the system without getting caught up.

Picking Up The Cable

Mention has already been made of the fact that the cable generally travels at a level lower than the grip. There are several methods of picking up the cable into the grip, depending on circumstances. At certain key points there is a dip in the track and at these points the cable passes through the bottom of the grip and can be retained in the grip by moving it to the full or partial release position. Similarly at the bottom of hills the cable tends to be nearer the road surface and can be picked up here as well. These two methods can be used on the move. On level sections of line at certain key points a roadside lever known as a cable lifter or gypsy wheel is provided. This is operated by the conductor. As the first name suggests this lifts the cable within reach of the grip. This is the method usually used at the terminus.

Letting Go Again

At several points during the journey it is necessary to let go of the cable entirely. The point where the cables of the California Line pass above those of the Powell Line has already been mentioned. Likewise cars on the Powell-Hyde and Powell-

Mason will at some point need to transfer between the Powell Line Cable and the cable dedicated to their route. Conveniently this happens at the same point at which all these cables return to the car barns obviating the need to let go for this purpose also. By contrast cars travelling west on the California Line do need to let go of the cable at the point where it returns to the car barn. They also need to let go at Hyde Street where the connecting line to the car barns diverges.

Not so obviously it is also necessary to let go on some curves. Known as Let-Go or Drift curves they are all on downhill gradients. The Cable car lets go before the curve and coasts round the corner before picking up the cable again. The cable, instead of following the track, carries straight on until it reaches a Sheave where it is turned though 90º (or whatever angle the corner happens to be) from there returning beneath the track just before the pick-up point.

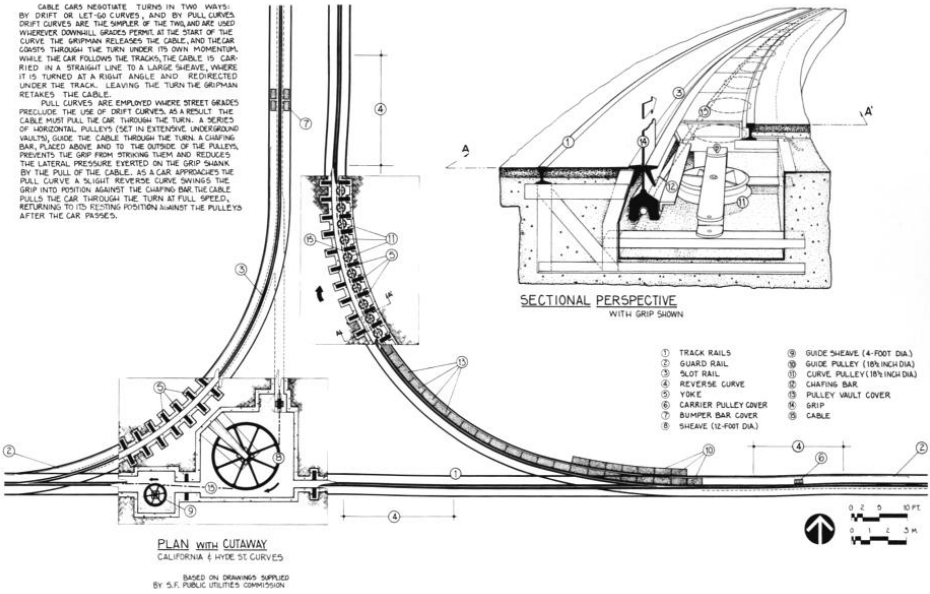

Where a curve exists on a rising gradient a more complicated arrangement is required to guide the cable around the curve, since it must remain below the track at all times because the cable car needs to be hauled through the curve. This type of curve is known as a Pull Curve.
This is achieved by a series of horizontal pulleys on the inside of the curve. Above and slightly outside them is placed a chafing bar along which will rub the shank of the grip. This serves two purposes; it prevents the grip striking the pulleys and it reduces the lateral pressure exerted on the grip by the cable. As the car passes through the curve it pulls the cable away from the pulleys.

A Powell-Mason Line Service coasts across the intersection with the California Line Tracks

Memory Lapse

At all locations where the cable must be dropped bumper bars are provided to guard against the Gripman failing to let go of the cable. The bumper bar has a certain amount of vertical play but even at its highest position will hold the cable below the level of the grip. When in its highest position the bar is

also clear of the grip except for a glass tube containing white paint which is mounted on top of the bar. Where a cable car approaches without letting go of the cable the bumper bar is raised to it highest position by the cable and once its vertical limit of movement is reached the bar forcibly pulls the cable from the grip. At the same time the glass tube is broken by the grip, covering it in paint. This paint can be used to identify which car was responsible, although in practice significant marks are also left on the jaws of the grip. In normal operation where the cable is correctly let go the bumper bar will be at its lowest position and thus the grip will pass clear of the glass tube.

Up Hill and Down Dale

There are many changes of gradient on the cable car system. The vast majority are between level and uphill/downhill track. This is because most road junctions tend to be on the level even when none of the streets approaching the junction are. Getting the cable to change gradient is not a problem at the summits as it only requires the cable to run over a pulley. At the foot of the hill however the problem is to stop the cable riding up through the slot in the track. In other words in this case the pulley needs to be above the cable and is thus in the way of the grip, which cannot be disengaged as the cable car is about to climb a hill. The solution is known as a Depression Beam.

The Depression beam contains a pulley which sits above the cable holding it down a short distance below the road surface. This is at a higher level than normal and also higher than the cable would be if held by the grip. As a cable car approaches the grip forces the cable lower moving it clear of the pulley in the Depression Beam. At the same time the grip pushes the Depression beam to one side by rubbing along the tapered side of the beam. As soon as the grip is clear of the beam the beam returns to its former position either by weight or by springs.

At this point the grip still holds the cable lower than the pulley in the depression beam and as the cable car moves away the cable rises into contact with this pulley once again.

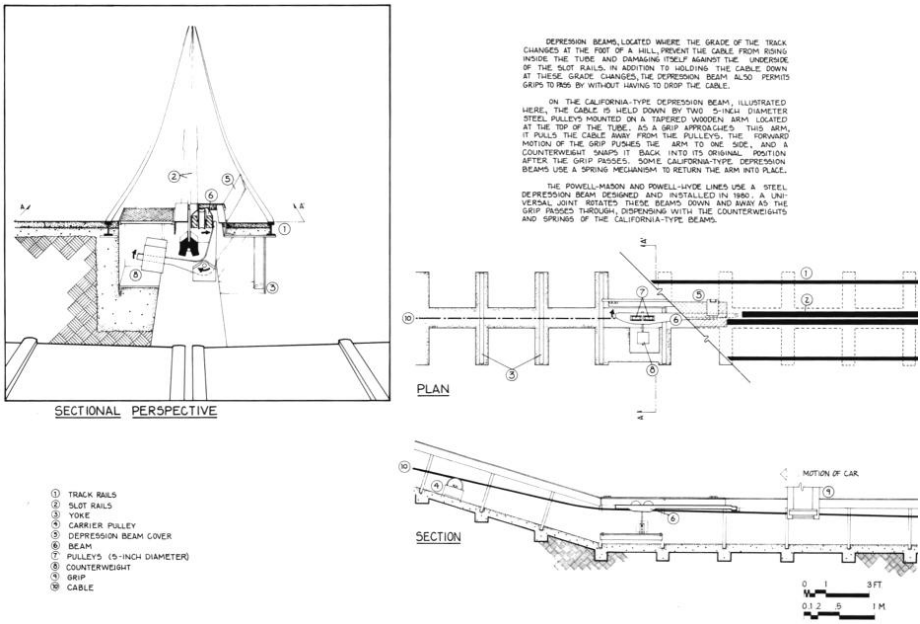

Conclusion

I hope you have found this description of how the San Francisco Cable Cars operate as interesting to read as it has been for me to write. If you are ever in San Francisco you should definitely spare some time to explore the system and in particular visit the Cable Car Barn and Museum. In the meantime if you would like to find out more about the system and its history a lot of information can be found on the internet. A good place to starts is the official website of the system www.sfcablecar.com or the website of the museum www.cablecarmuseum.com

Shunting Challenge

Morris Thompson has contributed this Shunting Puzzle which he located in an old copy of The Model Railway News.

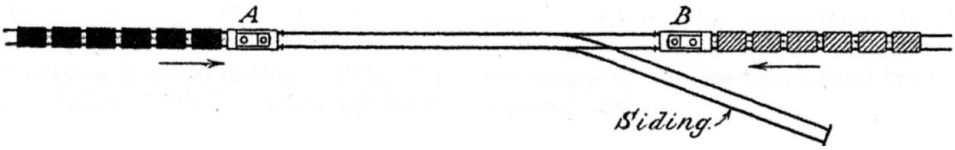

Two trains A and B going in opposite directions on a single line meet at a point where there is only a siding and not a passing loop. Each train consists of a locomotive and six wagons. The siding is only long enough to accommodate six wagons but cannot take the locomotive at the same time as the wagons. To further complicate matters, although the locomotive may be uncoupled from the train the wagons cannot be split up during the shunting moves.
The trains have to pass in as few moves as possible in order to minimise the delay.

Answer on page 37.

Pin Point the Date

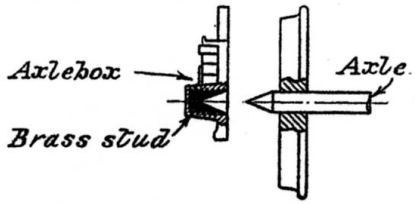

Section through axlebox of the suggested bearing for reducing rolling friction.

Pin Point Axles have been used for many years by railway modellers. The diagram on the left appeared in an article in Model Railway News describing Pin Point Axles for the first time. **Morris Thompson** asks you to guess when this article was published?

Answer on page 37.

More Odd Corners of IDSME

How well do you know IDSME? The following photographs show odd corners of IDSME. Can you identify their location?

1

2

3

4

5

6

Answers on page 37.

TIME AND MOTION

By The Bobby

Despite famously declaring at the AGM that 'I don't give a d*** about the money' the new treasurer, Mark Hamlin, has introduced a policy which he hopes will lead to significant efficiencies in IDSME's operations. As a first step in this process he carried out a Time and Motion Study on the recent running day. Unfortunately one of Sir Cyril's minions sneaked up and reorganised his paper work while he wasn't looking. Which one did it remains a mystery but apparently the treasurer's records were deemed to be an unauthorised list. Quite by coincidence this was the day that each driver unveiled his latest locomotive all of which had been inspired by other members' locomotives. The results of the study have therefore become hopelessly confused. However you may be able to help him sort out the results. Using the clues below can you tell him which driver took which locomotive with which trolley at what time?

The Drivers were: Matthew Byatt, Mel Fuller, Fred Matthews, Ian Mortimer, Steve Pennack, Peter Reynolds.

The Trolleys used: 7,8,9,10,11,12

The Locomotives: Edward, Macduff, Spinster of Kent, Tea Pot, Suburb of Nottingham, Three.

The Times they left the steaming bay: 11:45, 12:00, 13:00, 13:30, 13:45, 14:00.

Clues:

1 'Macduff', hauling trolley number nine, was the next engine off shed after the one driven by Ian Mortimer, which had a trolley with a number at least two higher.

2 Mel Fuller, driving 'Three', left the steaming bays with a trolley bearing a higher number than the one hauled by 'Edward'. At the time the 'Tea Pot' was still brewing up in Ickenham Marsh Running Shed.

3 'Spinster of Kent' hauled the 13.00 departure.

4 Peter Reynolds used trolley 12 but did not enter service at 11.45.

5 Fred's train left the steaming bay at 13.30 while the one that left at 12.00 used trolley number 7.

6 The 13.45 departure used a trolley, the number of which was two lower than the one used by Steve Pennack

The lack of visibility in the steaming bay on the recent running day probably further confused the records kept by Mark Hamlin

Answer in the next issue of Ashpan.

Call of the Diesel

Many years ago one of the two large Canadian Rail companies, either the Canadian National or the Canadian Pacific, introduced a new train whistle that unfortunately some Canadian wildlife found indistinguishable from its mating call. So acute was the problem that I understand there were several collisions between trains and this wildlife. A Canadian Poet, Richard Armour, wrote the following lines on the subject which I quote to the best of my memory

Geoff Higgs

Imagine this beast,
from the frozen Northeast,
with its annual amorous craze on,
seduced by the toot,
of a choo-choo en route,
into making a fatal liaison.

Imagine its sighs,
as it straddles the ties,
with no ken of the killer its dating,
for the sound of the train,
has gone straight to its brain,
and its mind is entirely on mating.

Catastrophic of course,
but consider what's worse,
and no words shall I wangle or weasel,
if a train should tear loose,
from the tracks when a moose,
made a call like the sound of a diesel.

Shunting Challenge.

B Engine leaves its wagons where they are and shunts to the siding (2 moves). A moves down to B's wagons and continues pushing them until the rear of train A is clear of the points (1 move). B engine leaves the siding and goes sufficiently far down the line to allow enough room for A to shunt B's wagons into the siding (1 move). A shunts B's wagons to the siding and then departs the area (4moves). B Engine reattaches to its wagons and then departs the area (2 moves). Total: 10 moves.

Pin Point The Date

The article was published in the December 1925 edition of Model Railway News.

More Odd Corners of IDSME

1 The Spotlight in the centre of the ceiling of the clubhouse.

2 The button for flushing the toilet

3 Looking vertically downwards at the Steaming Bay Exit Signal

4 Looking vertically upwards through the chimney above the forge behind the workshop.

5 One of the Steel supports in the carriage shed added when the floor above was strengthened.

6 Where the fence along the edge of the traverser pit joins the wall of the workshop.

Winter Programme

December 2004

Sunday 26th:	Members' Family Running Day
Wednesday 29th to Friday 31st:	Model Engineer Exhibition Sandown Park

January 2005

Saturday 1st:	Members' Family Running Day
Friday 7th:	Club & General Interest Night
Friday 14th:	Slides & Videos / Workshop Practice
Friday 21st:	Injectors. D.A.G. Browne
Friday 21st to Sunday 23rd:	London Model Engineering Exhibition Alexandra Palace.
Friday 28th:	Video Evening

February 2005

Friday 4th:	Dividing. Peter Pardington
Saturday 5th:	Proposed Site Working Party
Friday 11th:	Club Night
Friday 18th:	Slides & Videos / Workshop Practice
Friday 25th:	

March 2005

Friday 4th:	Building Steam Locomotives 2 John Shawe
Saturday 5th:	Proposed Site Working Party
Friday 11th:	Club & General Interest Night
Friday 18th:	Videos / Workshop Practice

April 2005

Saturday 2nd:	First Public Running Day, 2005 season.